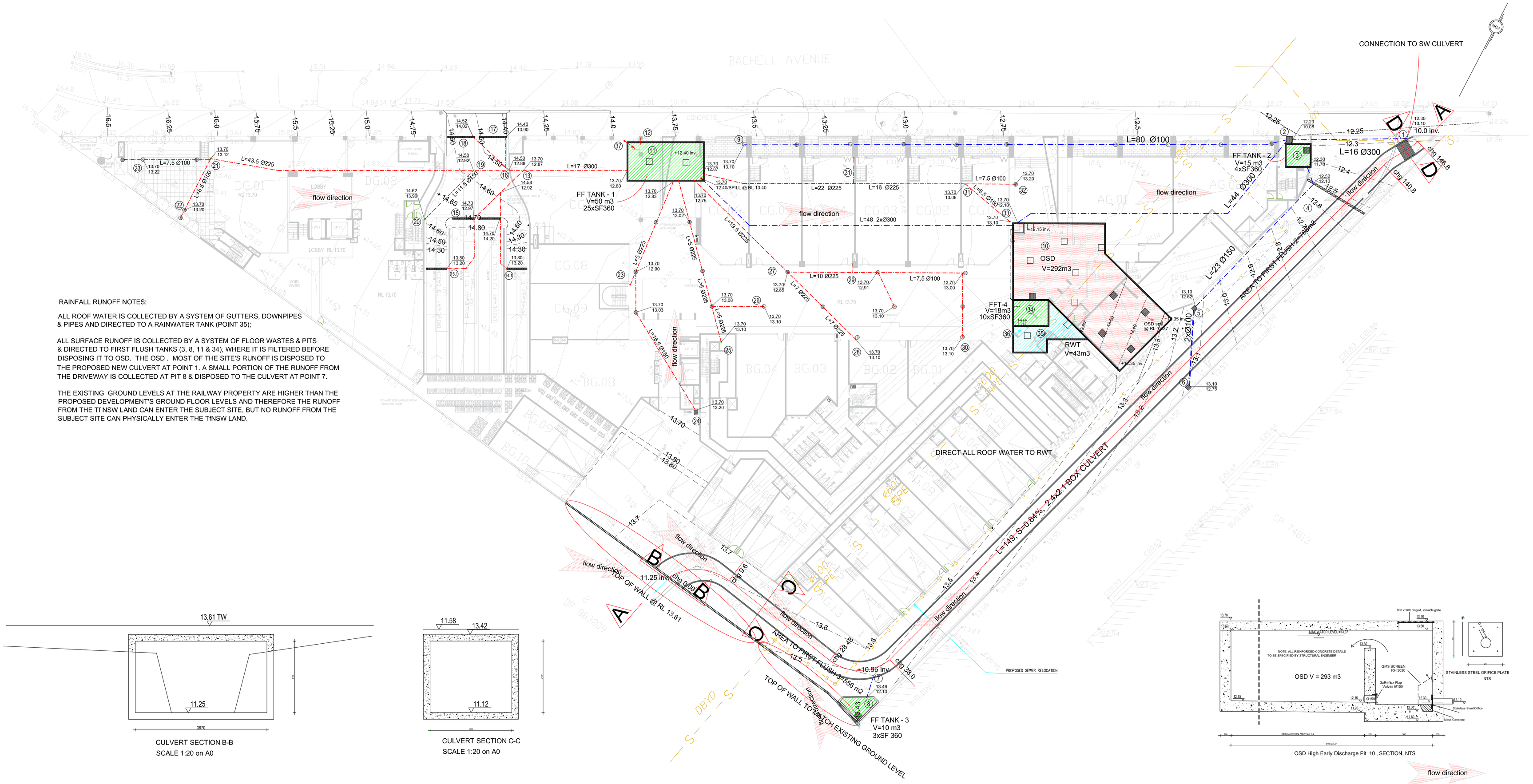

RAINFALL RUNOFF NOTES:

ALL ROOF WATER IS COLLECTED BY A SYSTEM OF GUTTERS, DOWNPIPES & PIPES AND DIRECTED TO A RAINWATER TANK (POINT 35);

ALL SURFACE RUNOFF IS COLLECTED BY A SYSTEM OF FLOOR WASTES & PITS & DIRECTED TO FIRST FLUSH TANKS (3, 8, 11 & 34), WHERE IT IS FILTERED BEFORE DISPOSING IT TO OSD. THE OSD . MOST OF THE SITE'S RUNOFF IS DISPOSED TO THE PROPOSED NEW CULVERT AT POINT 1. A SMALL PORTION OF THE RUNOFF FROM THE DRIVEWAY IS COLLECTED AT PIT 8 & DISPOSED TO THE CULVERT AT POINT 7.

THE EXISTING GROUND LEVELS AT THE RAILWAY PROPERTY ARE HIGHER THAN THE PROPOSED DEVELOPMENT'S GROUND FLOOR LEVELS AND THEREFORE THE RUNOFF FROM THE TfNSW LAND CAN ENTER THE SUBJECT SITE, BUT NO RUNOFF FROM THE SUBJECT SITE CAN PHYSICALLY ENTER THE TfNSW LAND.

CULVERT SECTION B-B
SCALE 1:20 on A0

CULVERT SECTION C-C
SCALE 1:20 on A0

OSD High Early Discharge Pit 10 , SECTION, NTS

flow direction

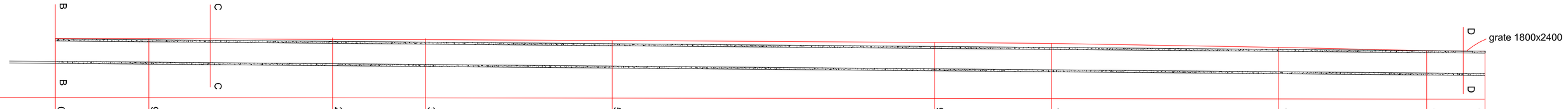

	B		C							D	
CHAINAGE (m)	0.00	9.60		28.48	38.00	57.17	90.30	102.29	125.61	140.8	146.8
DRIVEWAY LEVEL (m)	13.30	13.60		13.51	13.49	13.40	13.20	13.10	12.70	12.37	12.30
INVERT LEVEL (m)	11.25	11.17		11.01	10.93	10.76	10.48	10.38	10.18	10.05	10.00
TOP OF CULVERT (m)	13.55	13.47		13.31	13.23	13.06	12.78	12.68	12.48	12.35	12.30
DISTANCE (m), SLOPE	L=9.6m S=0.85%	L=18.88m S=0.85%		L=9.52m S=0.85%	L=19.17m S=0.85%	L=33.13.1m S=0.85%	L=11.99m S=0.85%	L=23.32m S=0.85%	L=15.19m S=0.85%	L=6m S=0.85%	

CULVERT LONG SECTION A-A
SCALE 1:100 on A0

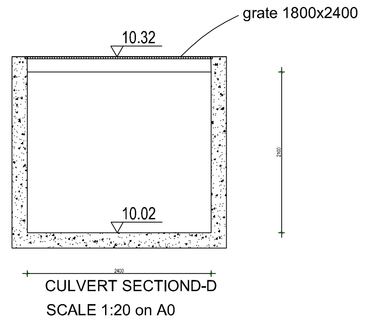

CULVERT SECTIOND-D
SCALE 1:20 on A0

LEGEND	
SDP / SDP	SURFACE WATER DOWNPIPE 100 Ø ROOF WATER DOWNPIPE 100Ø
	EXISTING CONTOUR (m)
22	PROPOSED CONTOUR (m)
Fp / Fw	SUB_SOIL DRAIANGE FLUSH POINT FLOOR WASTE 250x250 min
connected to SW culvert / surface water / roof water / L=9 Ø100	STORMWATER DRAINAGE PIPE DIAMETER = AS SHOWN, LENGHT = AS SHOWN
	SUBSOIL DRAINAGE PIPE (default Ø100mm, min. slope 1%)
23.00 / 22.50	FINISHED GROUND LEVEL=23.0(m) PIPE INVERT LEVEL=22.5 (m)
23.17	EXISTING GROUND LEVEL (m)
23.20	PROPOSED GROUND LEVEL (m)
23.20	TOP OF WALL (m)
50.1	REFERENCE POINT

Amendments

Issue	Date	Comments
1	13/06/21	for discussion
2	29/06/22	for comments
3	29/09/22	for comments2
4	29/11/22	for comments3
5	23/12/22	draft
6	23/11/22	for comments 4
7	30/03/23	for comments 5
8	17/04/23	for DA
9	5/07/24	ground floor drawing cleared

0 1 2 3 4 5 10

STORMWATER DRAINAGE PLAN FOR PROPOSED DEVELOPMENT AT No. 2 BACHELL AVENUE, LIDCOMBE

GROUND FLOOR

DESIGNED BY: PAVEL KOZAROVSKI, MIEAus, CPEng, NPER-3

DRAWN BY: P.K.

DRAWING No.C-3732-04

SCALE: 1:200 on A0, 1:400 on A2

Kozarovski & Partners
14/23-34 KINGSWAY, CRONULLA NSW 2230
(02) 8544 8720
Mobile: 0412 997 767 pavelk@optusnet.com.au